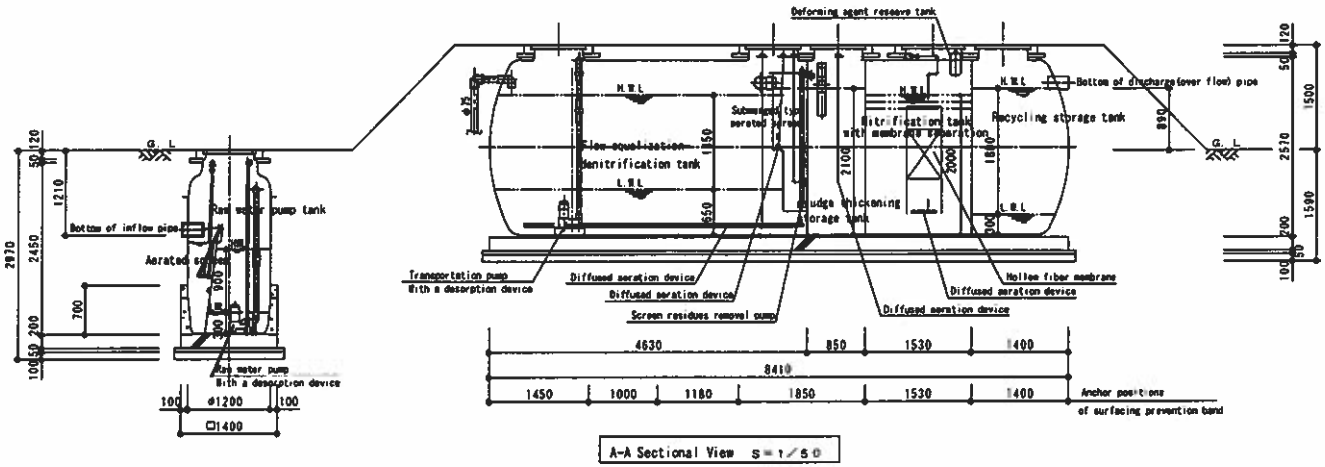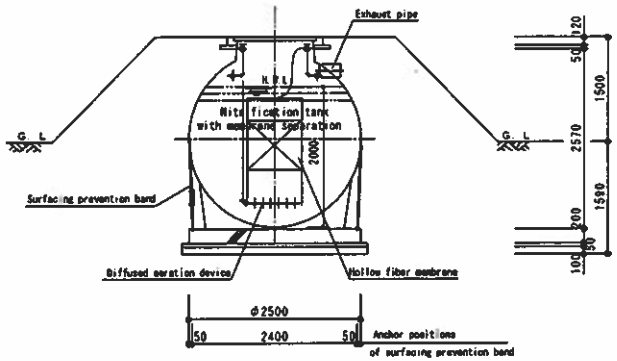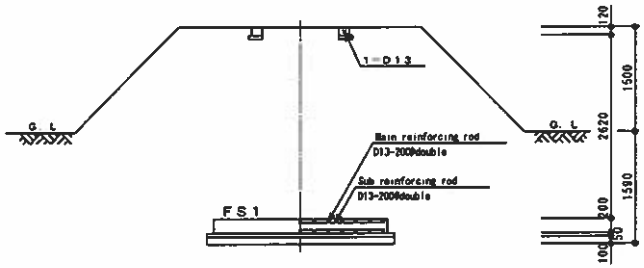Waste-Water Treatment Plant Schematic 2